NEW

Fine-Coax Wire Connector for Small Portable Devices

FI-JK Series

CONNECTOR
MB-0189-1
October 2008

RoHS Compliant

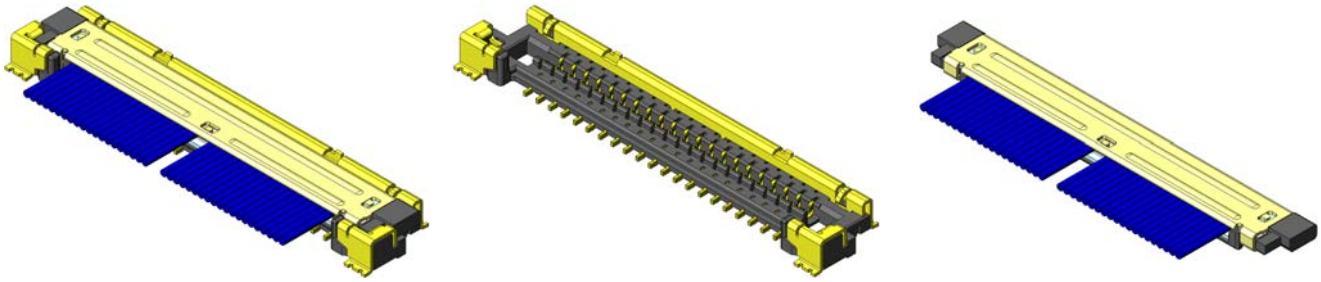

The FI-JK Series is a compact, low profile connector with a plug that can pass through a very small diameter hinge after harness assembly.

Features

- Plug side can pass through a 3.0mm dia. hinge after harness assembly (40 pos., 44 AWG)
- Mated dimensions;
  34pos.: 3.7mm depth, 15.58mm width, 1.56mm height
  40 pos.:3.7mm depth, 17.38mm width, 1.34mm height
- Enhanced connection stability by 0.25mm effective contact length
- More stable connection with gold plated ground contact points on plug and receptacle
- Mis-mating prevention structure
- Noise resistance characteristic is enhanced by ground contact points not only on the sides but also in the connector center
- Applicable wire: compatible with 42 and 44 AWG fine-coaxial wire
- Supports automated mounting with embossed tape for receptacle
- Solder migration prevention structure with Ni barrier on receptacle

JAE PMK Div. Proprietary. Copyright © 2008, Japan Aviation Electronics Industry, Ltd.

General Specifications

- ■No. of Contacts : 30, 34 pos.
- ■Pitch: 0.3mm
- ■Operating Temperature:
  -40 Deg. C to +85 Deg. C
- ■Contact Resistance:
  40m ohm max. (initial)
- ■Durability: 30 mating cycles
- ■Rated Current: AC, DC each 0.25A per pos.
- ■Rated Voltage: AC, DC each 50V per pos.
- ■Insulation Resistance: 100M ohm min.
- ■Dielectric Withstanding Voltage :
  AC 100Vr. m.s per minute
- ■Applicable Wire: 42 to 44 AWG

Materials and Finishes

Component	Material / Finish
Receptacle (FI-JK**S-VF1*A)	
Contact	Copper alloy / Contact area Au plating over Ni, Terminal area Au flash plating over Ni
Shell	Copper alloy / Contact area Au plating over Ni
Side Shell	Copper alloy / Contact area Au plating over Ni
Insulator	Heat resistant plastic UL94V-0
Adsorption Cover	Stainless steel
Plug (FI-JK**C)	
Contact	Copper alloy / Contact area Au plating over Ni, Terminal area Au flash plating over Ni
Insulator	Heat resistant plastic UL94V-0
Plug / Base Ground Bar (FI-JK**C-BGB)	
Base Ground Bar	Copper alloy / Sn plating over Ni
Plug / Cover Ground Bar (FI-JK**C-CGB)	
Cover Ground Bar	Copper alloy / Sn plating over Ni
Plug / Cover Shell (FI-JK**C-SH1)	
Cover shell	Stainless steel / Au flash plating over Ni

JAE PMK Div. Proprietary. Copyright © 2008, Japan Aviation Electronics Industry, Ltd.

Ordering Information

Receptacle Side
Individual Product
(34 pos. SJ108001)

FI-JK 34 S - VF 16A

- Series: FI-JK
- No. of Contacts: 34 pos.
- Socket Side: S
- Vertical Type: VF
- Modification Code 16A: General

Unit: mm

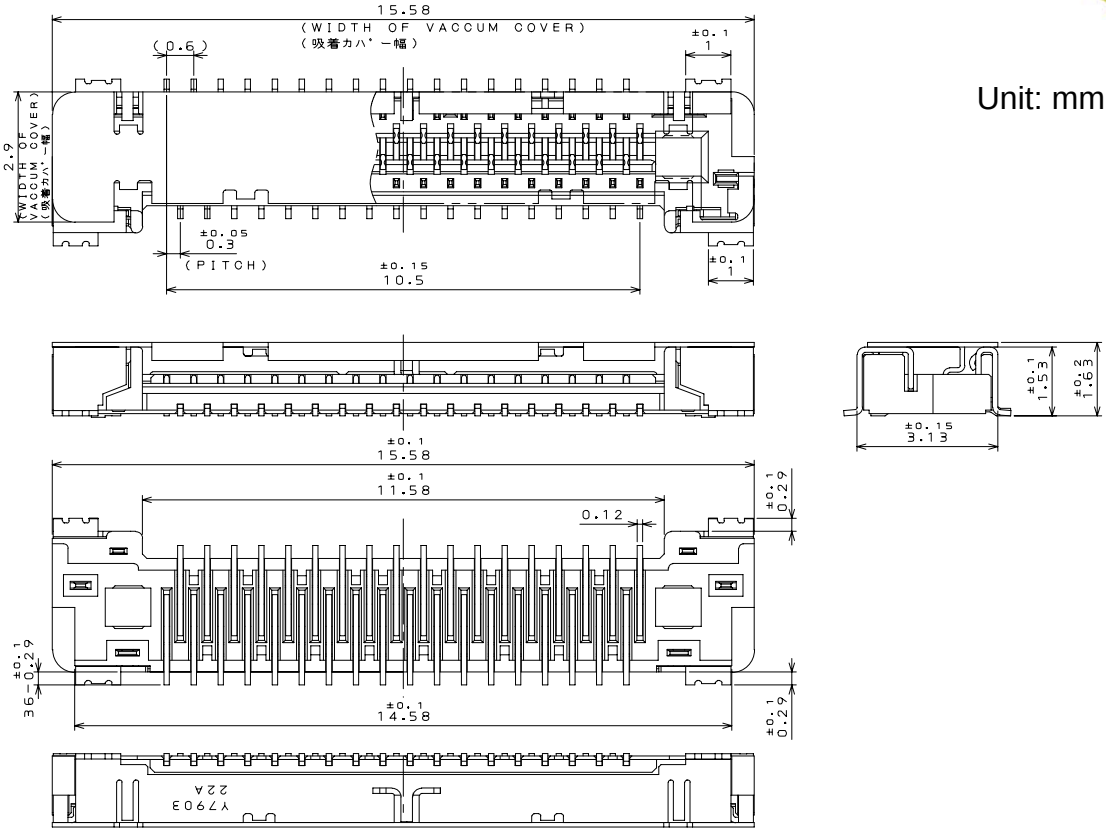

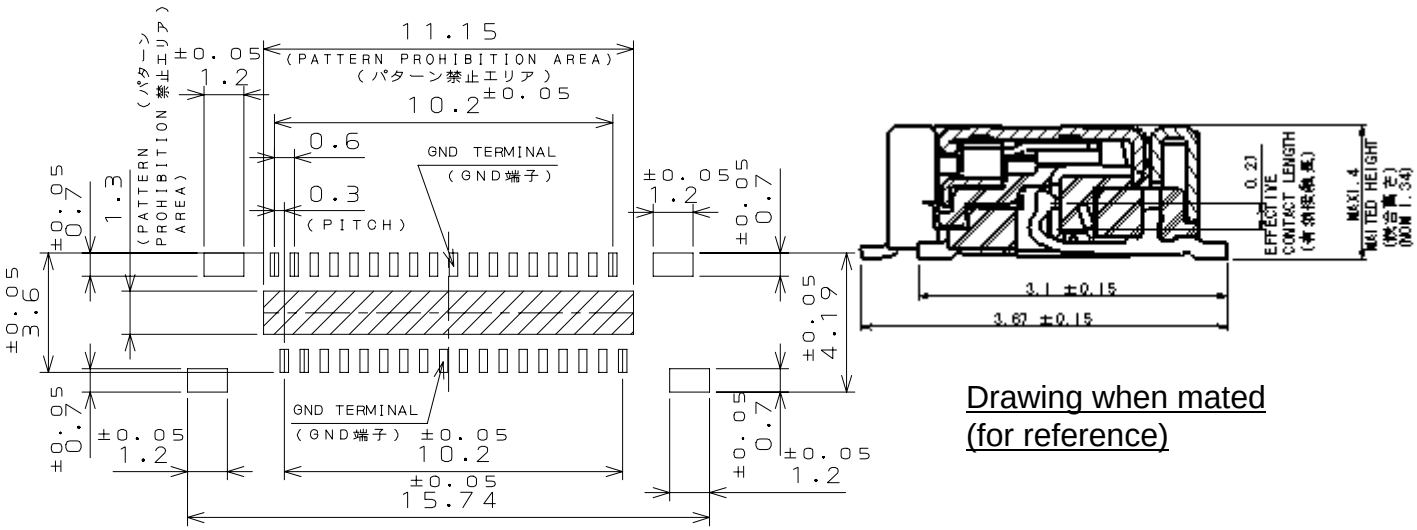

Drawing when mated
(for reference)

Recommended dimensions of board

JAE PMK Div. Proprietary. Copyright © 2008, Japan Aviation Electronics Industry, Ltd.

Ordering Information

Receptacle Side
Individual Product
(40 pos. SJ108066)

FI-JK 40 S - VF 14A

- FI-JK: Series
- 40: No. of Contacts: 40 pos.
- S: Socket Side
- VF: Vertical Type
- 14A: Modification Code 14A: General

Unit: mm

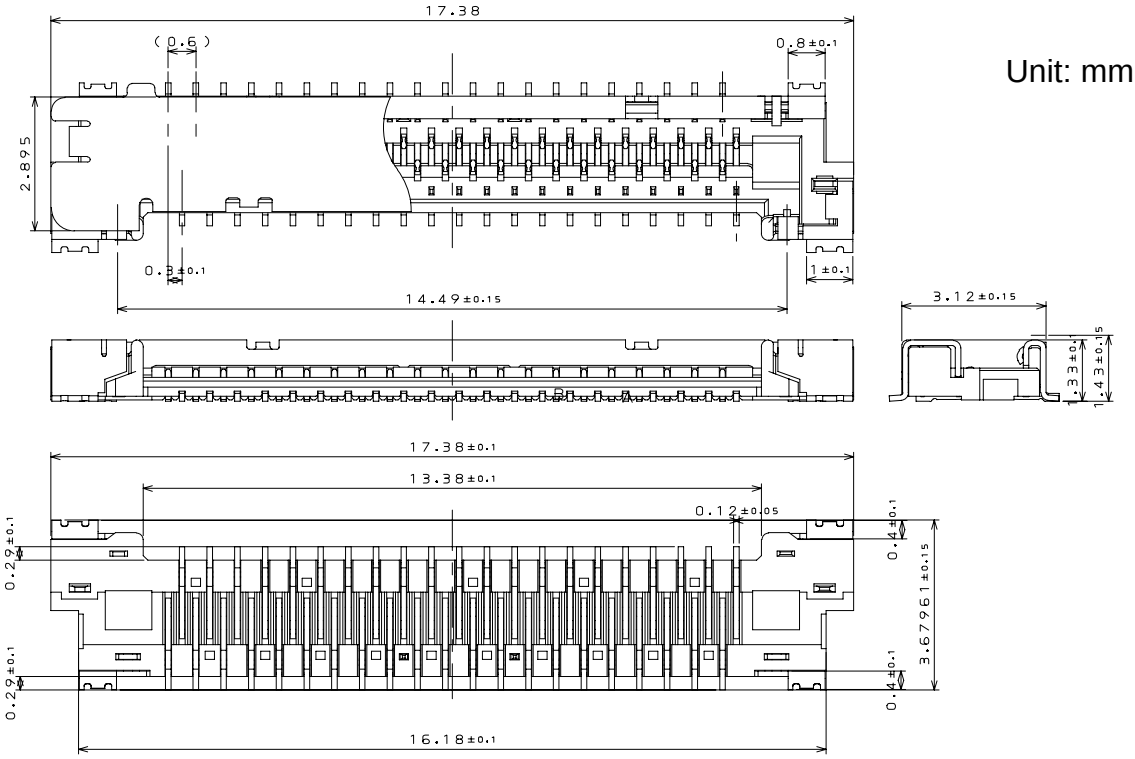

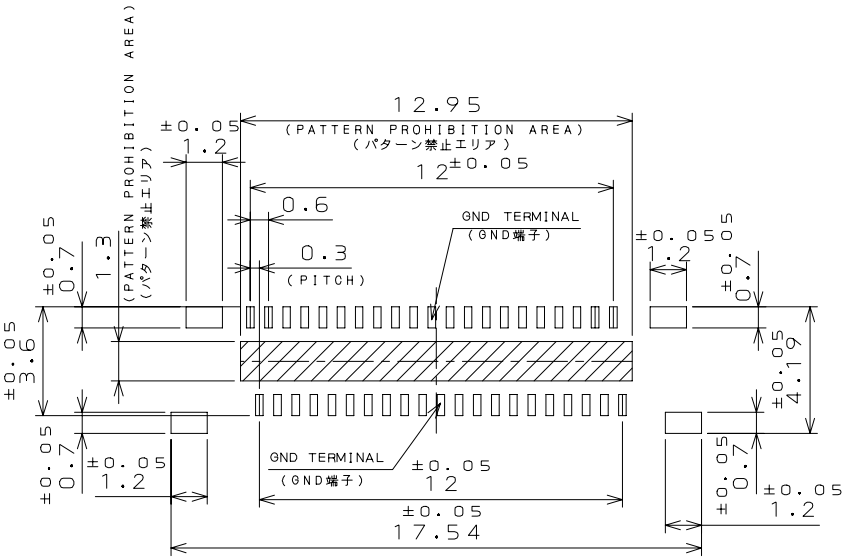

Recommended dimensions of board

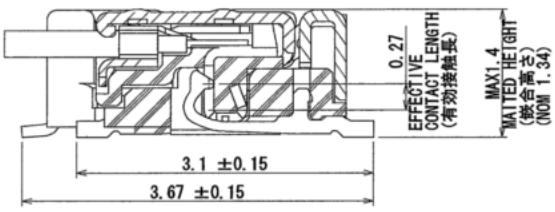

Drawing when mated
(for reference)

JAE PMK Div. Proprietary. Copyright © 2008, Japan Aviation Electronics Industry, Ltd.

Ordering Information

Receptacle Side Emboss Product (34 pos. SJ108002)

FI-JK 34 S VF 16A - R3000

- FI-JK: Series
- 34: No. of Contacts: 34 pos.
- S: Socket Side
- VF: Vertical Type
- 16A: Modification Code 16A: General
- R3000: Emboss Product 3000pcs. / reel

Unit: mm

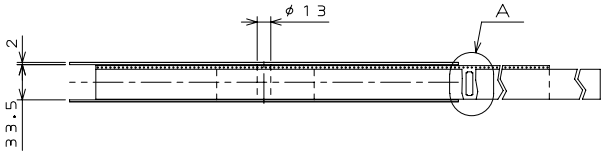

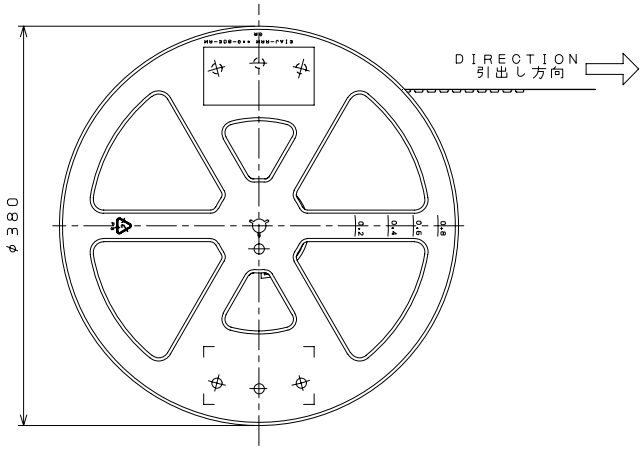

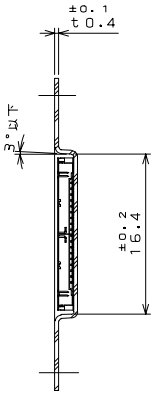

SECT. B−B

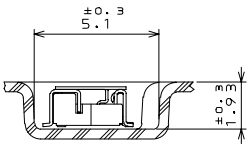

SECT. C−C

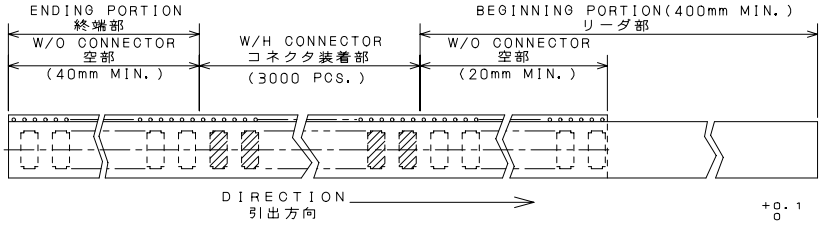

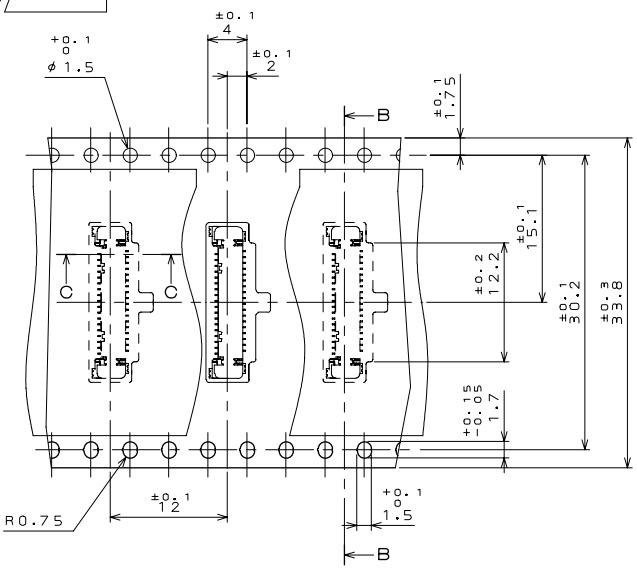

DETAIL A

JAE PMK Div. Proprietary. Copyright © 2008, Japan Aviation Electronics Industry, Ltd.

Ordering Information

Receptacle Side
Emboss Product
(40 pos. SJ109040)

FI-JK 40 - S - VF 14A - R3000B

- FI-JK: Series
- 40: No. of Contacts: 40 pos.
- S: Socket Side
- VF: Vertical Type
- 14A: Modification Code 14A: General
- R3000B: Emboss Product 3000pcs. / reel

Unit: mm

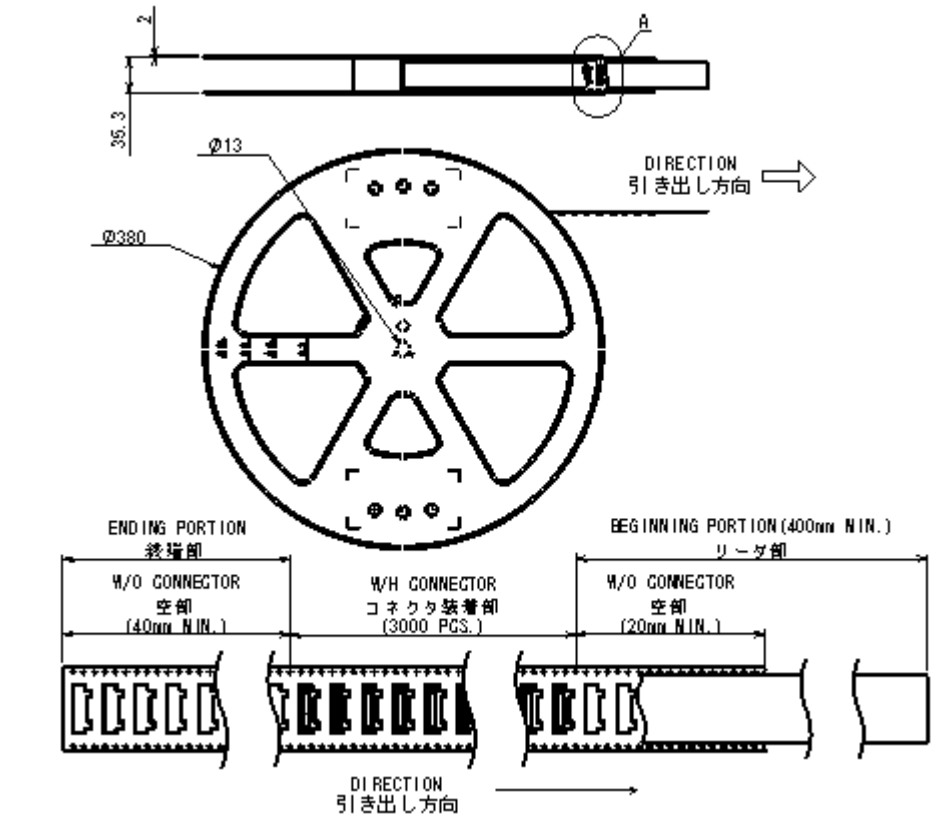

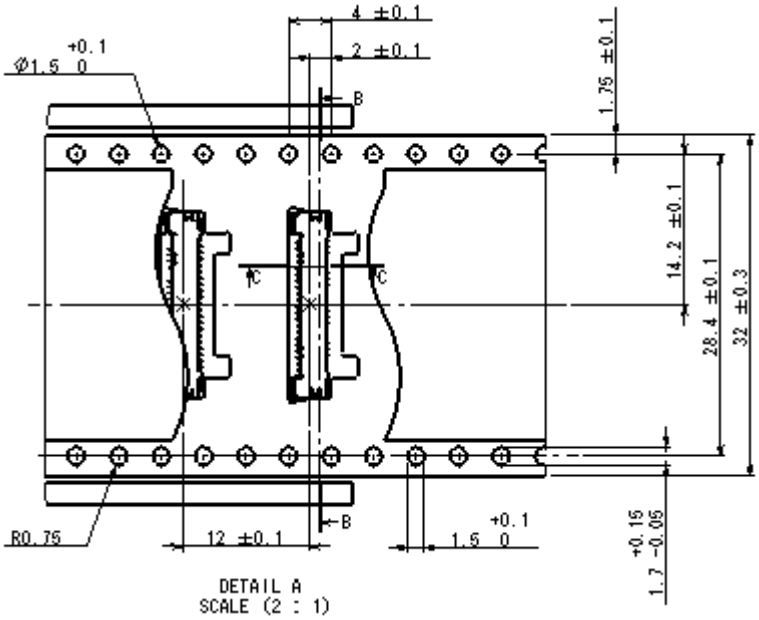

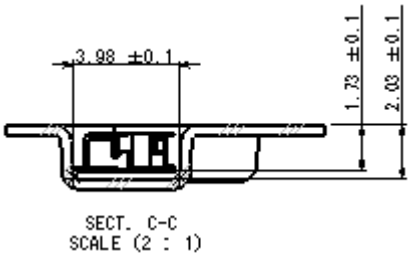

JAE PMK Div. Proprietary. Copyright © 2008, Japan Aviation Electronics Industry, Ltd.

Ordering Information

Plug Side, Insulator (34 pos. SJ107561)

FI-JK 34 C

Series

No. of Contacts: 34 pos.

Plug Side

Unit: mm

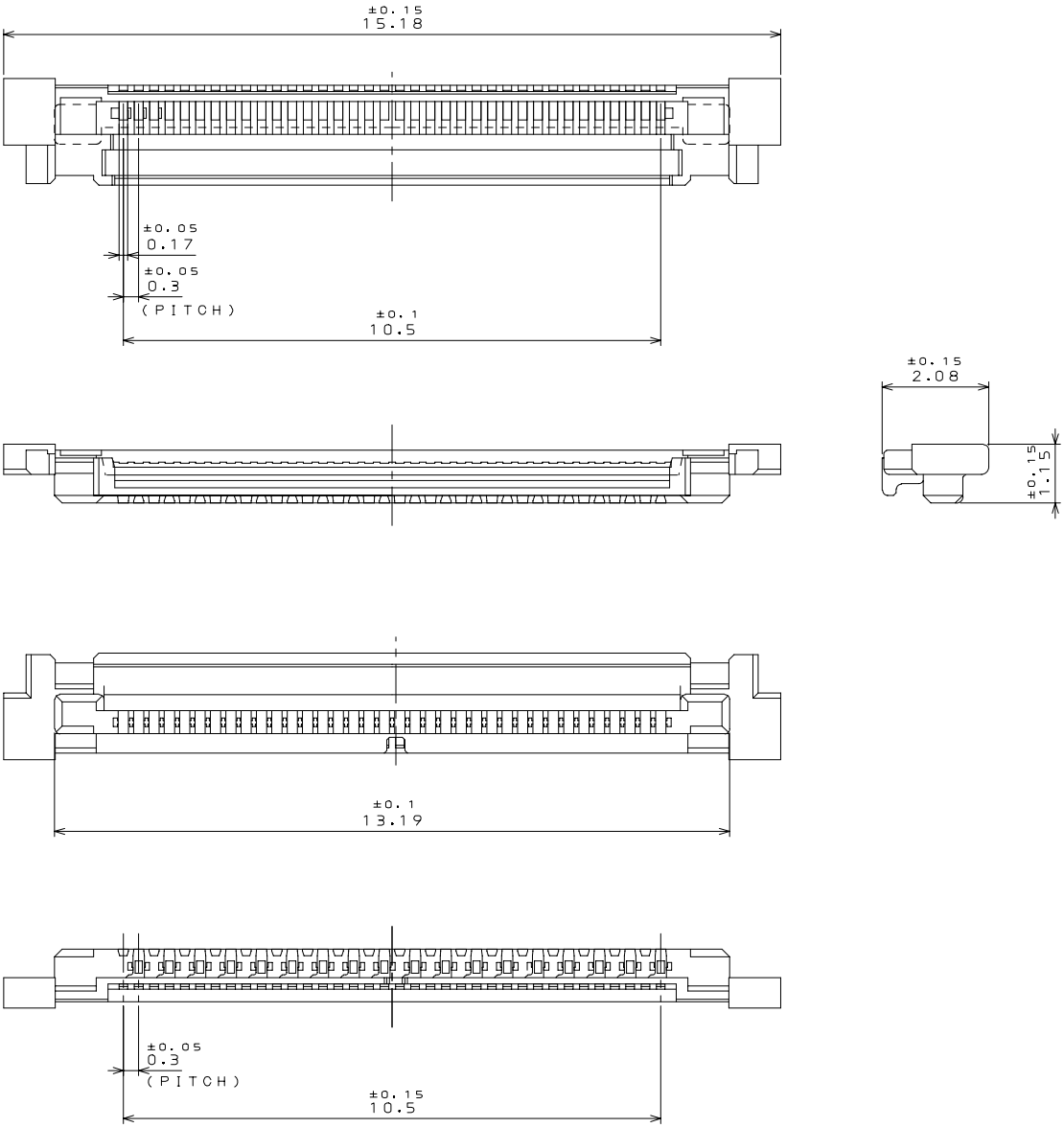

JAE PMK Div. Proprietary. Copyright © 2008, Japan Aviation Electronics Industry, Ltd.

Ordering Information

Plug Side, Insulator (40 pos. SJ107846)

FI-JK 40 C

Series

No. of Contacts: 40 pos.

Plug Side

Unit: mm

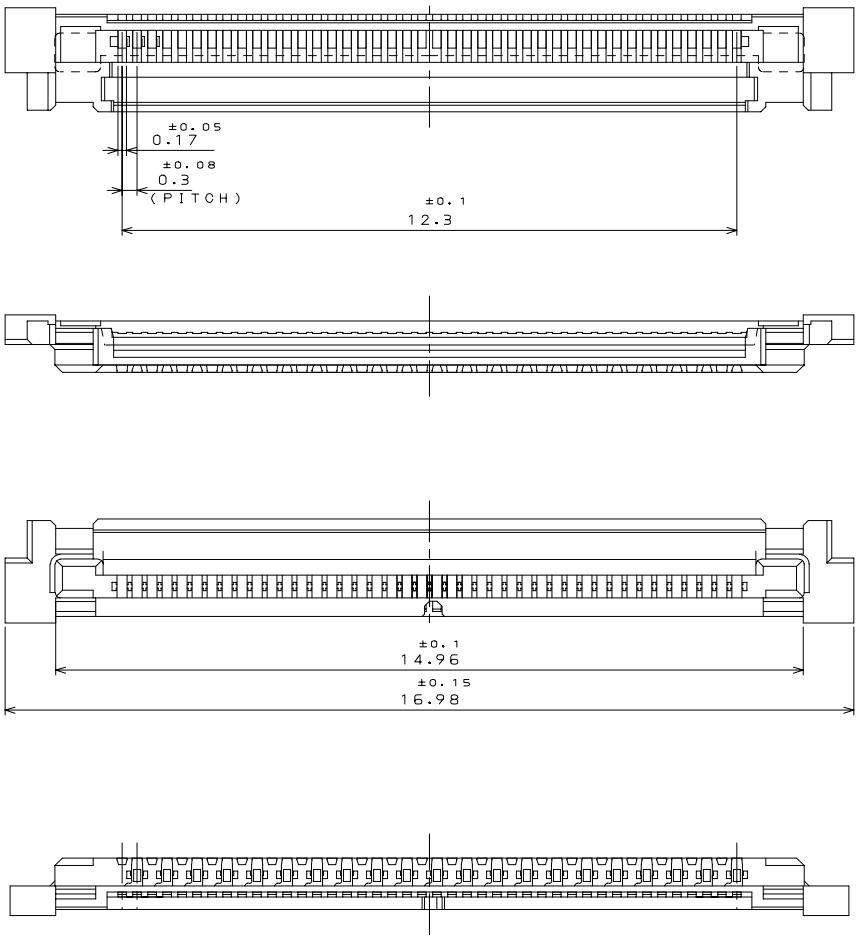

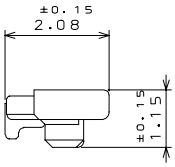

JAE PMK Div. Proprietary. Copyright © 2008, Japan Aviation Electronics Industry, Ltd.

Ordering Information

Plug Side, Insulator Emboss Product (34 pos. SJ107562)

FI-JK 34 C - R3000

- FI-JK: Series
- 34: No. of Contacts: 34 pos.
- C: Plug Side
- R3000: Emboss Product 3000pcs. / reel

Unit: mm

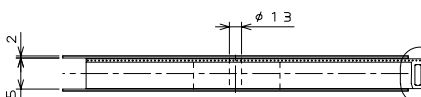

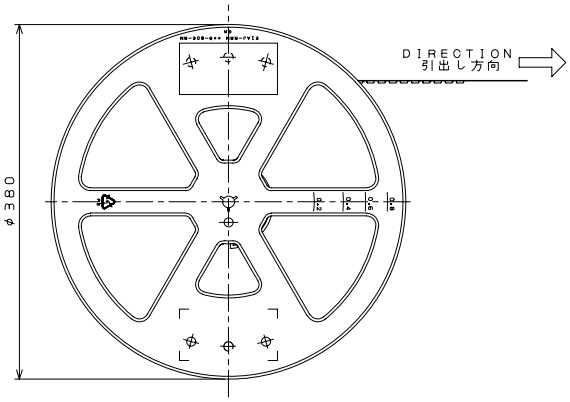

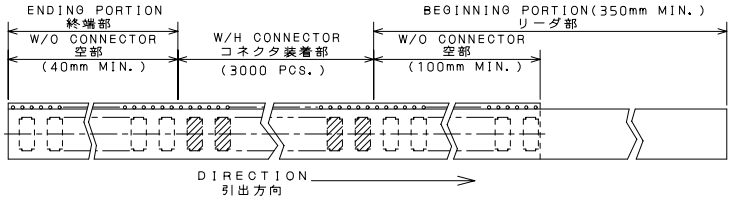

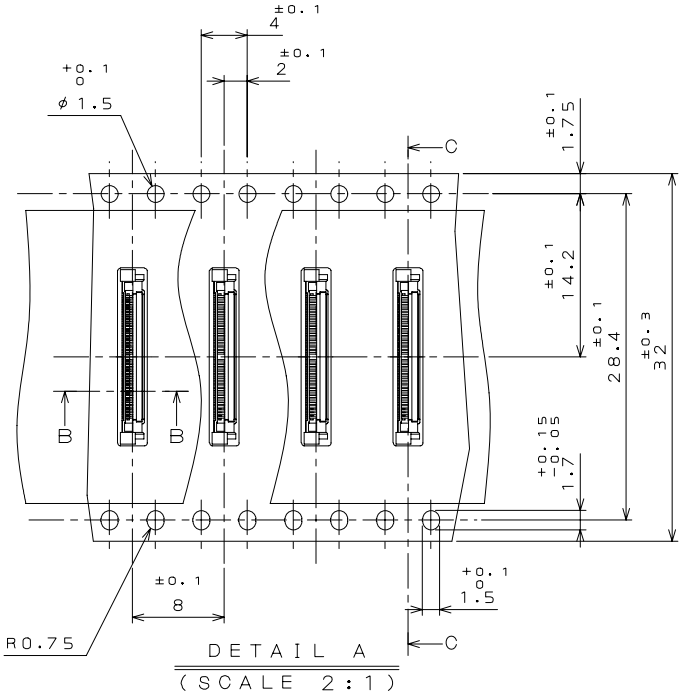

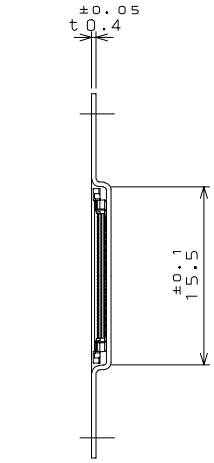

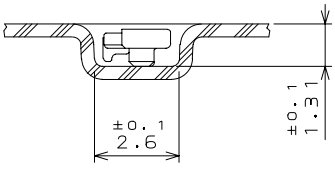

JAE PMK Div. Proprietary. Copyright © 2008, Japan Aviation Electronics Industry, Ltd.

Ordering Information

Plug Side, Insulator Emboss Product (40 pos. SJ107847)

FI-JK 40 C – R3000

- FI-JK: Series
- 40: No. of Contacts: 40 pos.
- C: Plug Side
- R3000: Emboss Product 3000pcs. / reel

Unit: mm

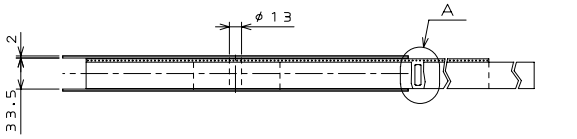

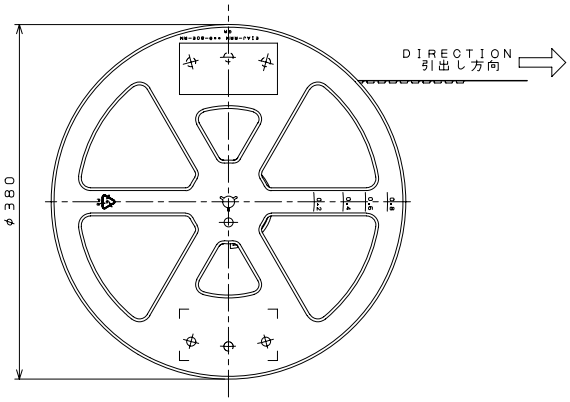

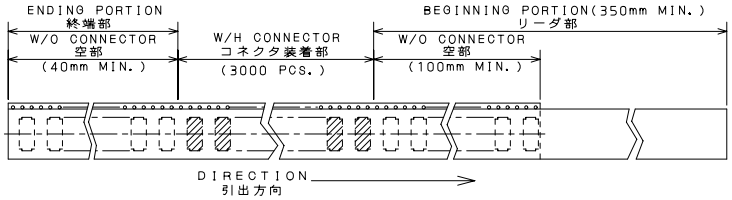

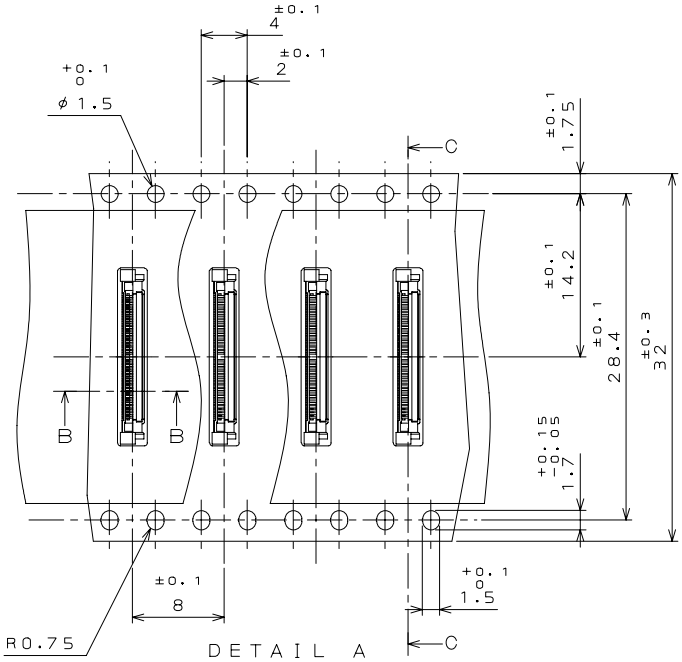

DETAIL A
(SCALE 2:1)

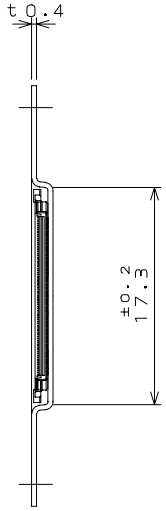

SECT. C−C
(SCALE 2:1)

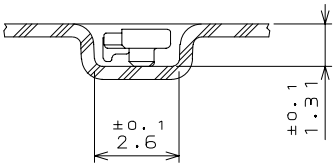

SECT. B−B
(SCALE 5:1)

JAE PMK Div. Proprietary. Copyright © 2008, Japan Aviation Electronics Industry, Ltd.

Ordering Information

Plug Side, Shell (34 pos. SJ107519)

FI-JK 34 C – SH1 - 9000

- FI-JK: Series
- 34: No. of Contacts: 34 pos.
- C: Plug Side
- SH1: Shell
- 9000: 9000pcs. / reel

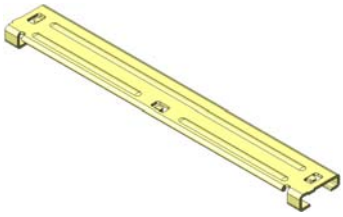

Unit: mm

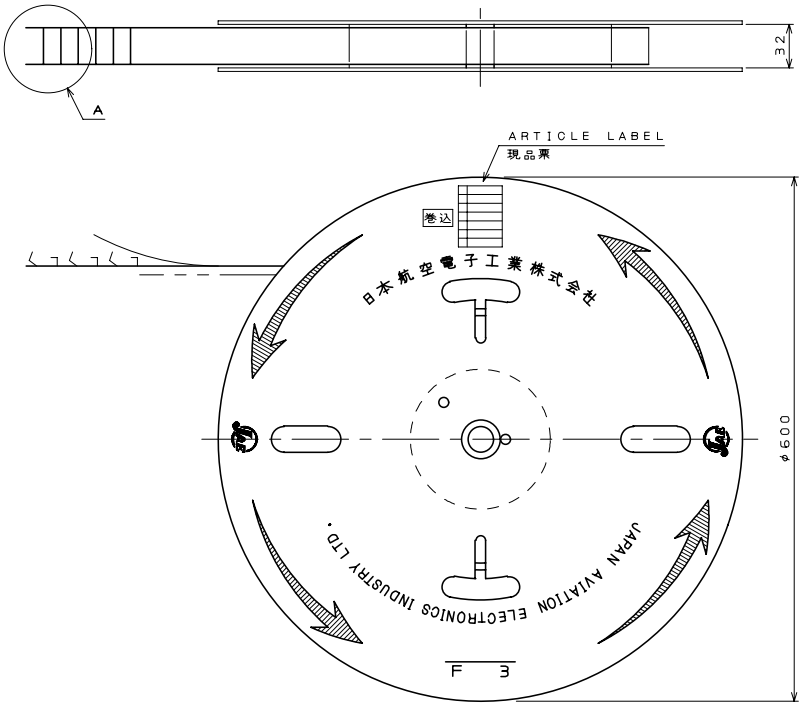

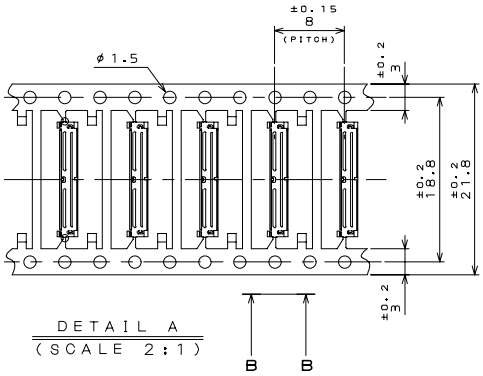

DETAIL A
(SCALE 2:1)

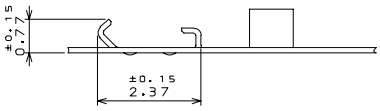

VIEW B−B
(尺度 5:1)

JAE PMK Div. Proprietary. Copyright © 2008, Japan Aviation Electronics Industry, Ltd.

Ordering Information

Plug side, Shell (40 pos. SJ107849)

FI-JK 40 C – SH1 - 9000

- FI-JK: Series
- 40: No. of Contacts: 40 pos.
- C: Plug Side
- SH1: Shell
- 9000: 9000pcs. / reel

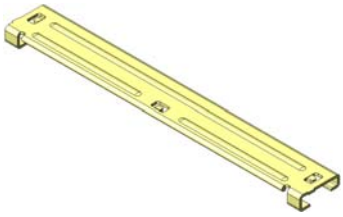

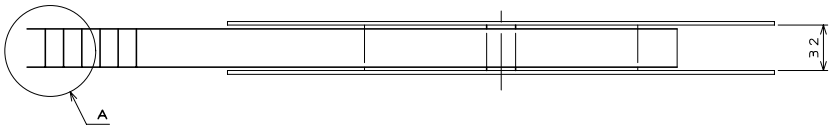

Unit: mm

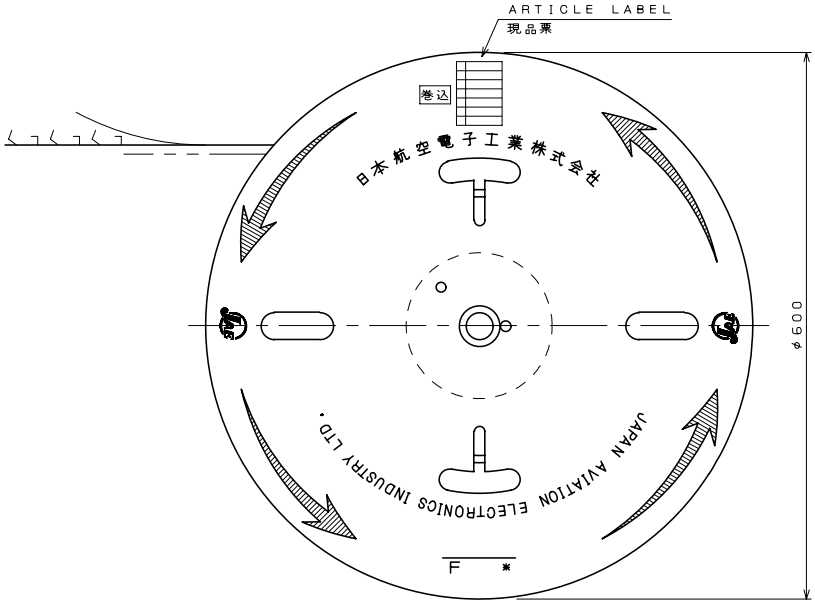

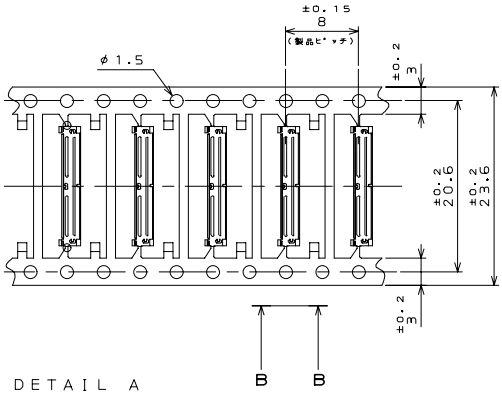

DETAIL A
(SCALE 2:1)

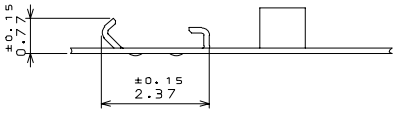

VIEW B−B
(尺度 5:1)

JAE PMK Div. Proprietary. Copyright © 2008, Japan Aviation Electronics Industry, Ltd.

Ordering Information

Plug Side, Base Ground Bar (34 pos. SJ107559)

FI-JK 34 C - BGB - 3000

- FI-JK: Series
- 34: No. of Contacts: 34 pos.
- C: Plug Side
- BGB: Base Ground Bar
- 3000: 3000pcs. / reel

Unit: mm

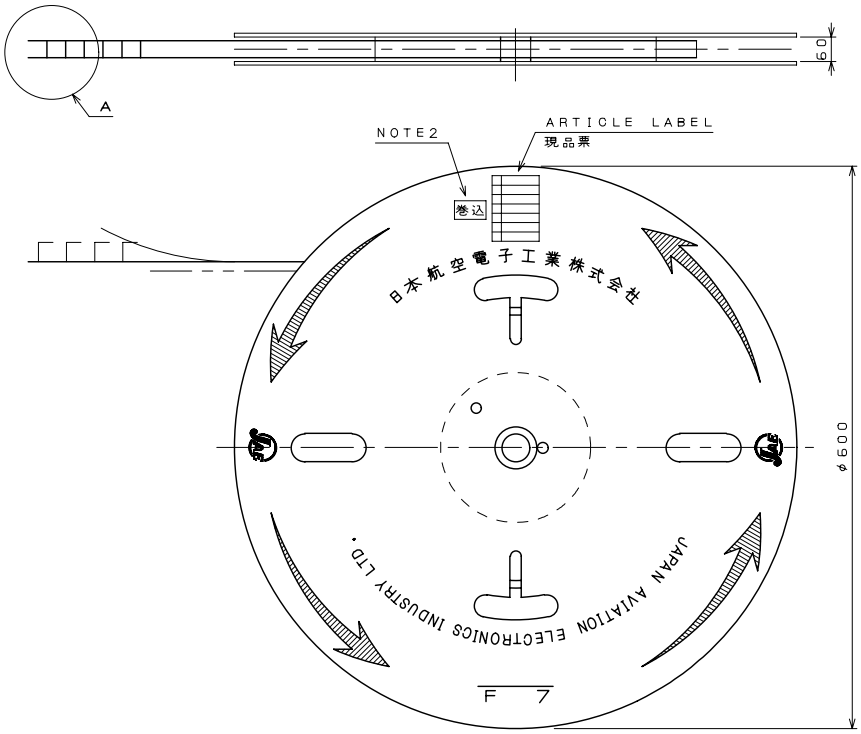

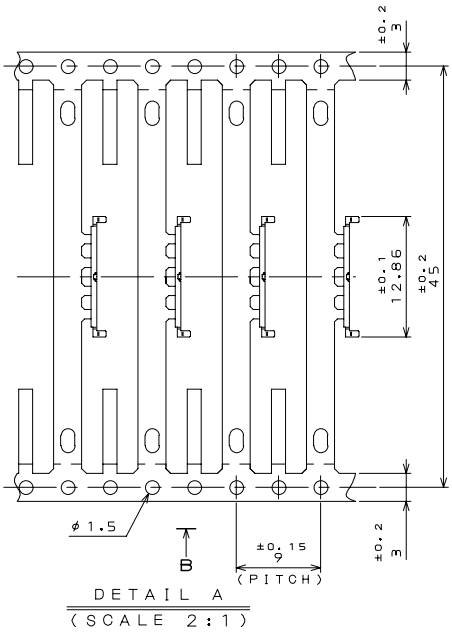

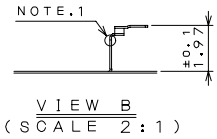

JAE PMK Div. Proprietary. Copyright © 2008, Japan Aviation Electronics Industry, Ltd.

Ordering Information

Plug Side, Base Ground Bar (40 pos. SJ107848)

FI-JK 40 C - BGB - 6000

- FI-JK: Series
- 40: No. of Contacts: 40 pos.
- C: Plug Side
- BGB: Base Ground Bar
- 6000: 6000pcs. / reel

Unit: mm

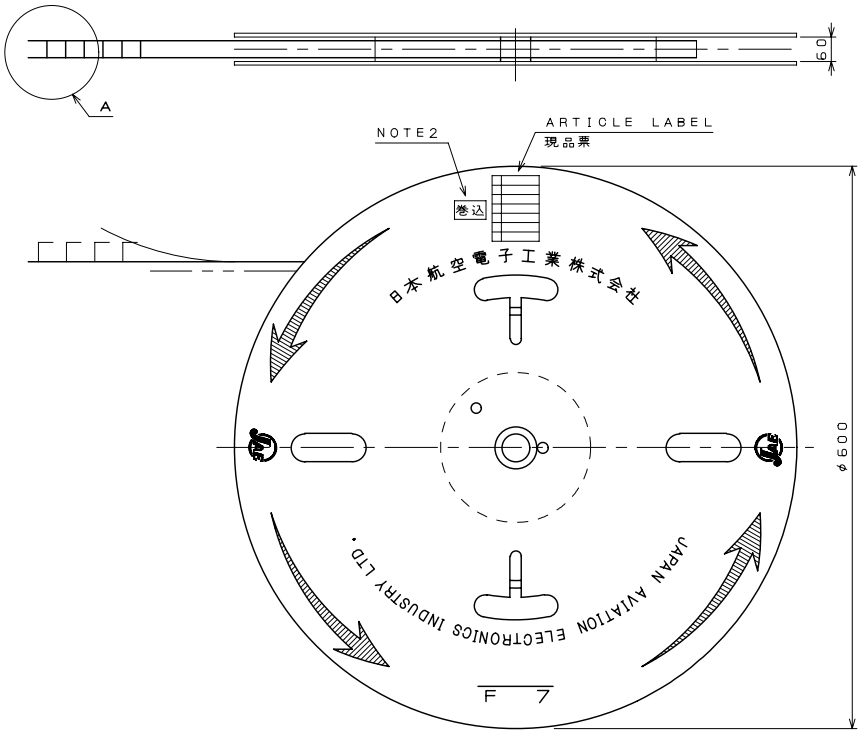

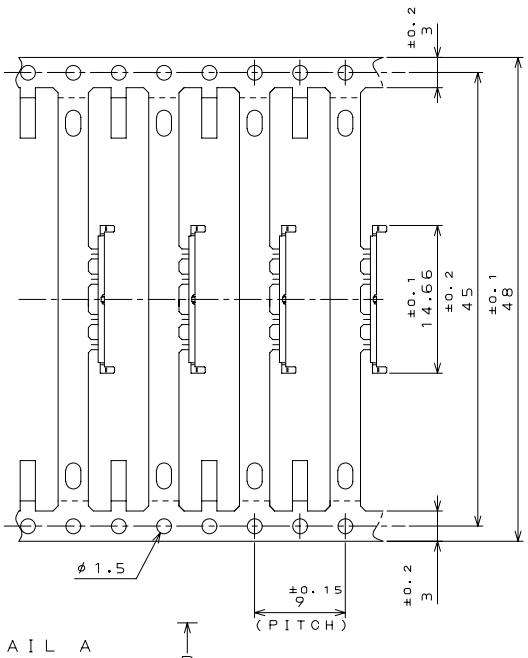

DETAIL A
(SCALE 2:1)

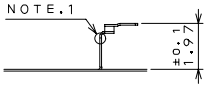

VIEW B
(SCALE 2:1)

JAE PMK Div. Proprietary. Copyright © 2008, Japan Aviation Electronics Industry, Ltd.

Ordering Information

Plug side, Cover Ground Bar (SJ107560)

FI-JK ** C - CGB - 30000

- FI-JK: Series
- **: No. of Contacts: 34, 40 pos.
- C: Plug Side
- CGB: Cover Ground Bar
- 30000: 30000 pcs. / reel

Unit: mm

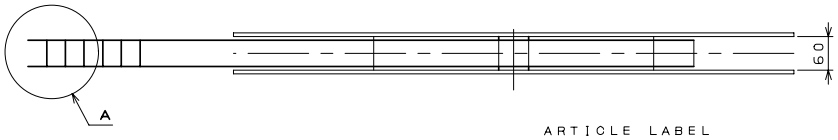

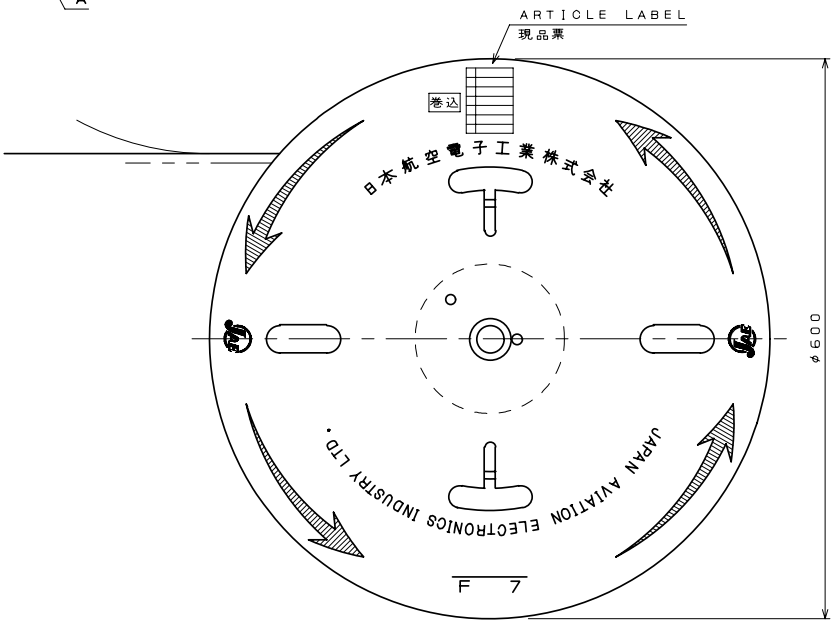

VIEW B
(SCALE 5:1)

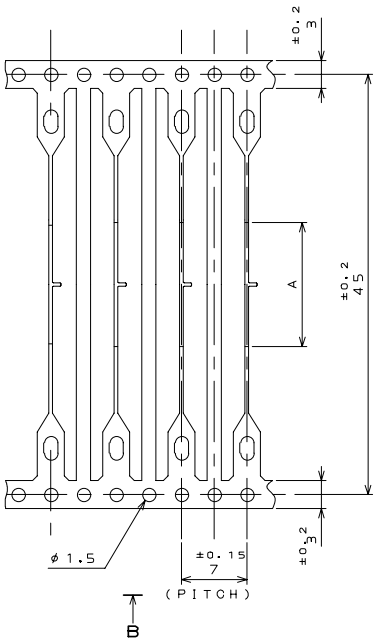

DETAIL A
(SCALE 2:1)

DIMENSIONS 寸法 / NO. OF CONTACTS 芯数	A
34	13.26
40	15.06

JAE PMK Div. Proprietary. Copyright © 2008, Japan Aviation Electronics Industry, Ltd.

Related Documents

-Specifications (JACS): JACS- 10432-3

-Harness Assembly Handling Instructions (JAHL): JAHL-10432-1

-Connector Handling Instructions (JAHL): 34 pos. JAHL-10432-10
40 pos. JAHL-10432-11

-Connector Extraction Tool
SJ Drawing: SJ713207-00, P/N：SC-FIJK-1C-K

-Plug Shell Clamping Tool
P/N： WT-FIJK-1-**
Tool Handling Instruction：T714281

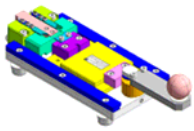

-Plug Ground Bar Cutting Tool
P/N：WT-FIJK-2-**
Tool Handling Instruction：T714286

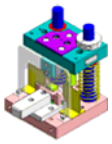

-Plug Core Cable Cutting Tool
P/N：CC-FIJK-1-**
Tool Handling Instruction：T751049

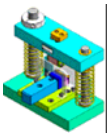

-Extraction Tool for Electrical Inspection
P/N：JG-FIJK-1-**
Tool Handling Instruction：T715117

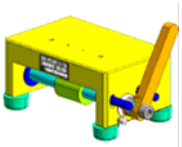

Notice: Products shown in this leaflet are made for the applications listed below. However, if the above-mentioned products are to be used in aerospace devices, marine cable-connection devices, atomic power control systems, medical equipment for life-support systems, or any other specific application requiring extremely high reliability, please contact JAE for further information.
Recommended applications: computers, office machines, measuring devices, telecommunication devices (terminals, mobile devices), AV devices, household applications, FA devices, etc.

Japan Aviation Electronics Industry, Limited

Product Marketing Division
Aobadai Building, 3-1-19, Aobadai, Meguro-ku, Tokyo 153-8539
Phone: +81-3-3780-2787 FAX: +81-3-3780-2946

* The specifications in this brochure are subject to change without notice. Please contact JAE for information.
JAE PMK Div. Proprietary. Copyright © 2008, Japan Aviation Electronics Industry, Ltd.